| Item | Name | Q.ty |
|---|---|---|
| 1 | CA.08.14.013 | 1 |
| 2 | GGD.10.05.05 | 1 |
| 3 | M.10.5x48B | 1 |
| 4 | SAE.10050510.1 | 1 |
| 5 | SAE.10050510.3 | 1 |
| 6 | SAE.10050510.4 | 2 |
| 7 | SAE.10050530.1 | 1 |

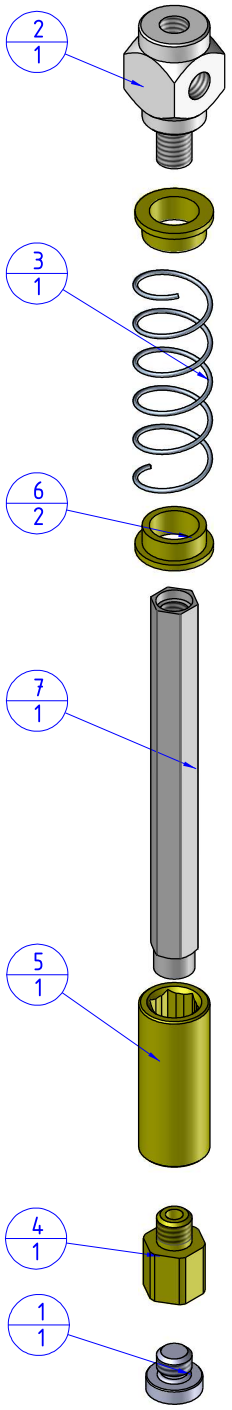


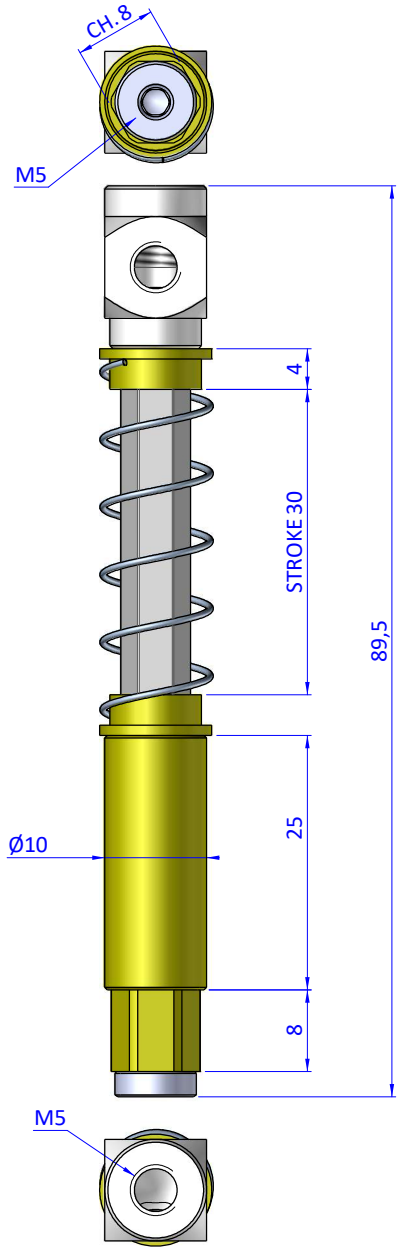


THE PROPERTY OF THE DRAWING IS ESTABLISHED BY LAW. IT IS FORBIDDEN TO PRODUCE OR SHOW IT TO THIRD PART. WITHOUT A WRITTEN AGREEMENT.

Format A3
UNI 936-76

FPS
FPSERVICES AUTOMATION

GENERAL TOLERANCE
UNI - ISO 2768
CLASSE f

DESCRIPTION
CA.SAE.1030.GGD

DESIGNED FROM
FPS Automation

REVIEW
A

DATE
25/08/2026

WEIGHT
0,025kg

CODE
CA.SAE.1030.GGD